ACU28V7K TECHNICAL INFORMTION

EGTRONICS CO., LTD
SUWON CITY, GYUNGGI-DO
16675 KOREA
www.egtroics.co.kr
info@egtronics.co.kr

LEGAL NOTICE

Publisher	EGTRONICS Co., LTD 3-502, Innoplex Bldg 304 Sinwon-ro Suwon, Gyunggi-do 16675 KOREA T +82 31 8002 3200 F +82 31 8002 3207 www.egtronics.co.kr info@egtronics.co.kr
Date of issue	June. 21. 2019

Revisions

Revision	Date	Name	Change
V0.1	19.06.21		Initial

INDEX

2.TECHNICAL DATA 기술자료

2.1DETAIL SPECIFICATION 상세사양

POWER	UNIT	STANDARD	REMARK
Power ratings	[kW]	7	
Input side voltage range	[V]	700(550-800)	
Input side current ratings	[A]	11.1(9.8~14.2)	
Output side Voltage range	[V]	28(17~30)	
Output side current ratings	[A]	250	
Control Power	[V]	24(16~32)	
Structure(Type)	[-]	Uni-Directional Phase shift Full Bridge converter	
Efficiency @ 80% Load	[%]	Over 94	
Efficiency @ Max Load	[%]	Over 92	

OPERATING CONDITION	UNIT	STANDARD	REMARK
Location	[-]	in Case	
Environ. Temp.(operating)	[℃]	-40 ~ 85	
Environ. Temp(storage)	[℃]	-40 ~ 105	

MECHANICAL	UNIT	STANDARD	REMARK
Weight	[kg]	Under 15	
Size(W*D*H) (mm*mm*mm)	[-]	380*233*93	
Vibration class(G)		ISO-16750	
Protection Class	[-]	IP69K	

COOLING	UNIT	STANDARD	REMARK
cooling method	[-]	Water cooling	
Required water flow rate	[ℓ/min.]	3 ~ 7 (MAX 14)	
Pressure	[bar]	1 (Max 2)	
Peak coolant Temp range	[℃]	5 ~ 65	
Max allowable Temp range	[℃]	65	
coolant material	[-]	Water 50% / Glycol 50%	
Hose Inside Diameter	[Φ]	19	

CONTROL	UNIT	STANDARD	REMARK
Type of Controller	[-]	Digital/Analog	
Command source and type	[-]	Voltage command from PCU (via CAN)	
Command recurrence time	[ms]	10	
Control period(sampling rate)	[kHz]	1	
Control accuracy(steady state)	[V]	±0.1V	
Control Bandwidth	[Hz]	Over than 1,000	

PROTECTION	UNIT	STANDARD	REMARK
Input Under Voltage warning	[V]	550~580	
Input Under Voltage fail	[V]	Under 550	
Input Over Voltage warning	[V]	780~800	
Input Over Voltage fail	[V]	Over 800	
Output Under Voltage warning	[V]	16~17	
Output Under Voltage fail	[V]	Under 17	
Output Over Voltage warning	[V]	29~30	
Output Over Voltage fail	[V]	Over 30	
Output Over Current	[A]	250	
Peak Current	[A]	250	
Short Current	[A]	346	
Temp Warning	[℃]	80~85	
Temp STOP	[℃]	85	
Temp Re-start	[℃]	Under 75	

2.2 CONNECTOR DATA 커넥터 사양

2.2.1 High Voltage INPUT CONNECTOR 입력커넥터

Vendor : JONHON

Model No. HV02-F2P(20A)-MA-1(Compatible Part no HV02-M2S(20A)-M00A-1)

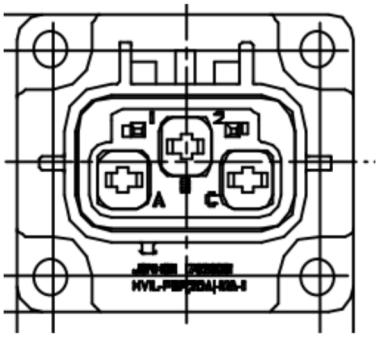

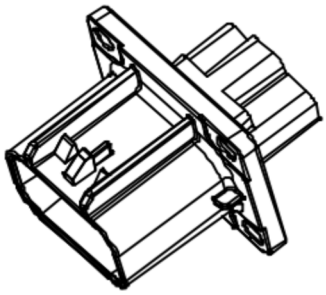

요청 내용 상세

◇ E1 : DC 입력용 커넥터 (고전압 배터리)

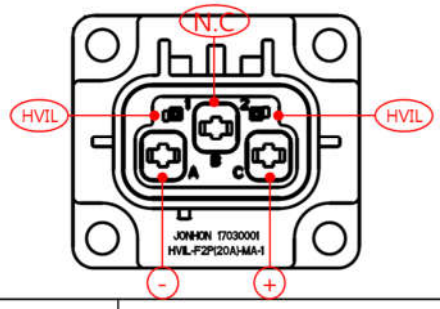

모델명	HVIL-F2P(20A)-MA-1	
제조사	JONHON	
PIN ARRANGEMENT (PART NO.)	Unit SIDE	HVIL-F2P(20A)-MA-1
	Wiring SIDE	HVIL-M2S(20A)-M00A-1 G002
핀별 정보	Voltage	1,000V AC
	Current	20A/5A
	Wire SQ	2.5

핀번호	입출력	신호명	전기적 사양(단품)		사양	비고
			전압 (Max)	전류 (Max)		
A	I	HV_DC (-)	850V	15A	고전압 입력 -	
B	-	-	-	-	-	미사용핀
C	I	HV_DC (+)	850V	15A	고전압 입력 +	
1	I	HVIL 1				커넥터 유무 감지
2	I	HVIL 2				커넥터 유무 감지

Receptacle(Unit Side)

첨부.
VIL-F2P(20A)-MA-

Plug(Wiring Side)

첨부.
vI2S(20A)-M00A-1

2.2.2 Low Voltage OUTPUT CONNECTOR 출력커넥터

Vendor : JONHON

Model No. GYHF-2-250Z-A(Compatible Part no GYHF-2-250T-A)

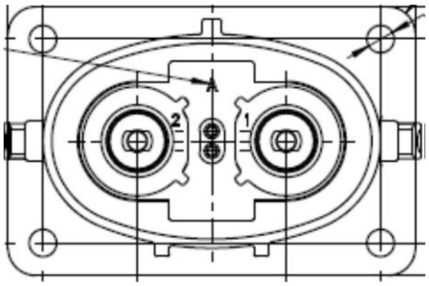

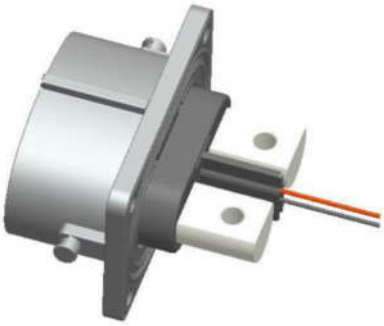

요청 내용 상세

◇ E2 : DC 입력용 커넥터 (고전압 배터리)

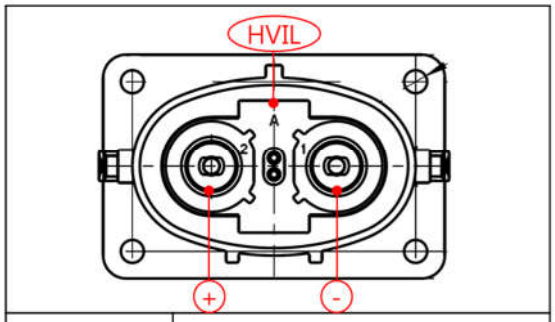

핀번호	입출력	신호명	전기적 사양(단품)		사양	비고
			전압 (Max)	전류 (Max)		
1	O	LV_DC (-)	28V	250A	저전압 출력 -	-
2	O	LV_DC (+)	28V	250A	저전압 출력 +	-
A	I	HVIL	-	-	-	커넥터 유무 감지

모델명	GYHF-2-250Z-A	
제조사	JONHON	
PIN ARRANGEMENT (PART NO.)	Unit SIDE	GYHF-2-250Z-A
	Wiring SIDE	GYHF-2-250T-A
핀별 정보	Voltage	1,000V AC
	Current	250A/5A
	Wire SQ	70 / 2.5

Receptacle(Unit Side)

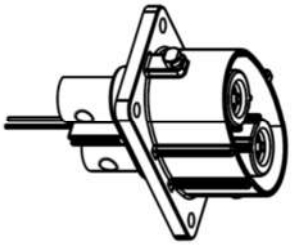

첨부.
GYHF-2-250Z-A

Plug(Wiring Side)

첨부.
GYHF-2-250T-A

2.2.3 COMMUNICATION CONNECTOR 통신커넥터

Vendor : TYCO AMP

Model No. 1-776262-1 (14Pin) (Compatible Part no 776273-1)

Detailed Contents

◇ E3 : SIGNAL CONNECTOR(14Pin)

첨부. 776262-1 첨부. 3D_776262-1

Model No	776262-1	
Manufacturer	TYCO	
PIN ARRANGEMENT (PART NO.)	Unit SIDE	776262-1
	Wiring SIDE	776273-1
Pin Info	Voltage	< 60V
	Current	< 17A
	Wire SQ	0.5~1.25

PIN No.	I/O	Signal Name	Electric Spec		Description	Wiring Path	Note
			V	A			
1	I/O	EV2-CAN_H	5	0.1	EV2 CAN High (LDC Backup)	-	LDC
2	I/O	EV-CAN_L	5	0.1	EV CAN Low (LDC Main)	-	LDC
3	I/O	EV-CAN_H	5	0.1	EV CAN High (LDC Main)	-	LDC
4	I	IG (+)	-	-	IG ON Signal	Vehicle	KEY ON
5	I	BAT (+)	28	1.2	+24V [VDC]	Battery	BATT ON
6	I/O	EV2-CAN_L	5	0.1	EV2 CAN Low (LDC Backup)	-	LDC
7							
8							
9	I	BAT(-)	28	0.1	24V[Ground]	GND	
10	I	CAN_GND	28	0.1	24V[Ground]	CAN GND	LDC
11							
12							
13							
14							

Detailed Contents

◇ E3_Communication Connector (14Pin)

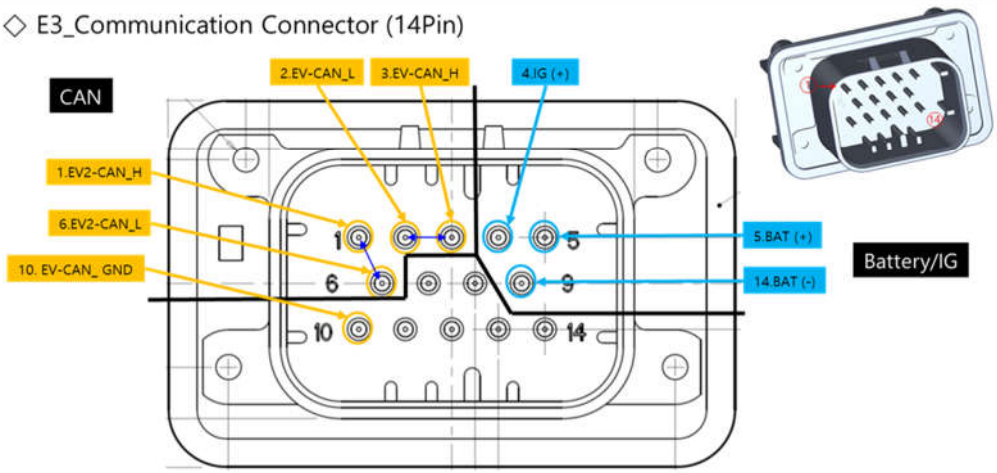

2.3 CAN Protocol 통신 프로토콜

2.3.1 Network Specification 네크워크 설정

Network Specification		
Layer		Specification
Physical Layer	Network Type	Bus Type
	Bus Wire Medium	Twisted Pari Wires
	Data Rate	250kbps (2.0B)
	ID type	Extendard
	Bit Timing	80%

2.3.2 CAN ID Definition CAN ID 정의

CAN Identifier Definition					
Definition	Cycle Time	CAN ID	Send Type	Sender(ECU)	Reciever(ECU)
DC/DC Convertor Control ID	100	0x18FF31EF	Period	Vehicle Control Unit	DCDC Converter
DC/DC Convertor Status ID	100	0x18FF041A	Period	DCDC Converter	Vehicle Control Unit
DC/DC Converter DM1 ID	1000	0x18FECA1A	Cycle	DCDC Converter	Cluster
TPCM	0	0X18ECFF1A	NoMsgSendType	DCDC Converter	Cluster
TPDT	0	0X18EBFF1A	NoMsgSendType	DCDC Converter	Cluster
DCDC UDS Protocol (Send)	0	0X18DAF91A	NoMsgSendType	DCDC Converter	Diagnostic Module
DCDC UDS Protocol (Receive)	0	0X18DA1AF9	NoMsgSendType	Diagnostic Module	DCDC Converter

2.3.3 CAN ID

Abbreviations	VCU	Vehicle Control Unit	Cluster	Cluster
	LDC	Low Voltage DC/DC Convertor	Tester	Diagnostic Module

	Tx Message						Signal Value					Range							
ECU	Message	ID (HEX)	DLC	Send Type	Cycle Time (ms)	Signal Name	Table	Value Type	At Start Value	Factor	Offset	Min	Max	Unit	Length (bits)	Start Bit	Start Position	DEST.	Timeout Time(ms)
VCU	VCU_to_LDC	0x18FF31EF	8	Periodic	100	LDC_Ready_CMD	0: Not Ready 1: Ready	Bool	0	1	0	0	1	FLAG	1	0	1.1	LDC	1000
VCU	VCU_to_LDC	0x18FF31EF	8	Periodic	100	LDC_Run_CMD	0: OFF 1: RUN	Bool	0	1	0	0	1	FLAG	1	1	1.2	LDC	1000
VCU	VCU_to_LDC	0x18FF31EF	8	Periodic	100	LDC_Key_On_Check_CMD	0: Key Off 1: Key On	Bool	0	1	0	0	1	FLAG	1	2	1.3	LDC	1000
VCU	VCU_to_LDC	0x18FF31EF	8	Periodic	100	LDC_Emergency_Stop_CMD	0: Run 1: Stop	Bool	0	1	0	0	1	FLAG	1	3	1.4	LDC	1000
VCU	VCU_to_LDC	0x18FF31EF	8	Periodic	100	LDC_Output_Voltage_CMD	Output Specification	UInt16	0	0.01	0	0	Spec	V	16	8	2.1	LDC	1000
VCU	VCU_to_LDC	0x18FF31EF	8	Periodic	100	LDC_Output_CurrentLimit_CMD	Output Specification	UInt16	0	0.1	0	0	Spec	A	16	25	4.1	LDC	1000
LDC	LDC_to_VCU	0x18FF041A	8	Periodic	100	LDC_Ready_FeedBack	0: Not Ready 1: Ready	Bool	0	1	0	0	1	FLAG	1		1.1	VCU	1000
LDC	LDC_to_VCU	0x18FF041A	8	Periodic	100	LDC_Run_FeedBack	0: Off 1: Run	Bool	0	1	0	0	1	FLAG	1		1.2	VCU	1000
LDC	LDC_to_VCU	0x18FF041A	8	Periodic	100	LDC_Key_On_Check_FeedBack	0: Key off 1: Key On	Bool	0	1	0	0	1	FLAG	1		1.3	VCU	1000
LDC	LDC_to_VCU	0x18FF041A	8	Periodic	100	LDC_Fault_Check_CMD	0: Normal 1: Fault	Bool	0	1	0	0	1	FLAG	1		1.4	VCU	1000
LDC	LDC_to_VCU	0x18FF041A	8	Periodic	100	LDC input Voltage		UInt16	0	0.1	0	0	1000	V	16		2.1	VCU	1000
LDC	LDC_to_VCU	0x18FF041A	8	Periodic	100	LDC output Voltage		UInt16	0	0.01	0	0	36	V	16		4.1	VCU	1000
LDC	LDC_to_VCU	0x18FF041A	8	Periodic	100	LDC output Current		UInt16	0	0.1	0	0	500	A	16		6.1	VCU	1000
LDC	LDC_to_VCU	0x18FF041A	8	Periodic	100	LDC temperature(Fet)		UInt16	0	1	-40	-40	150	℃	8		8.1	VCU	1000
LDC	LDC_DM1	0x18FECA1A	8	Cycle	1000	ProtectLampStatus	0x0:LampOff^0x1:LampOn^0x2:Reserved^0x3:NotAvailable	unsigned	0	1	0	0	1	FLAG	1		1.1		5000
LDC	LDC_DM1	0x18FECA1A	8	Cycle	1000	AmberWarningLampStatus	0x0:LampOff^0x1:LampOn^0x2:Reserved^0x3:NotAvailable	unsigned	0	1	0	0	1	FLAG	1		1.2		5000
LDC	LDC_DM1	0x18FECA1A	8	Cycle	1000	RedStopLampState	0x0:LampOff^0x1:LampOn^0x2:Reserved^0x3:NotAvailable	unsigned	0	1	0	0	1	FLAG	1		1.3		5000
LDC	LDC_DM1	0x18FECA1A	8	Cycle	1000	MalfunctionIndicatorLampStatus	0x0:LampOff^0x1:LampOn^0x2:Reserved^0x3:NotAvailable	unsigned	0	1	0	0	1	FLAG	1		1.4		5000
LDC	LDC_DM1	0x18FECA1A	8	Cycle	1000	FlashProtectLamp	0x0:SlowFlash^0x1:FastFlash^0x2:Reserved^0x3:Unavailable/DoNotFlash	unsigned	0	1	0	0	1	FLAG	1		2.1		5000
LDC	LDC_DM1	0x18FECA1A	8	Cycle	1000	FlashAmberWarningLamp	0x0:SlowFlash^0x1:FastFlash^0x2:Reserved^0x3:Unavailable/DoNotFlash	unsigned	0	1	0	0	1	FLAG	1		2.2		5000
LDC	LDC_DM1	0x18FECA1A	8	Cycle	1000	FlashRedStopLamp	0x0:SlowFlash^0x1:FastFlash^0x2:Reserved^0x3:Unavailable/DoNotFlash	unsigned	0	1	0	0	1	FLAG	1		2.3		5000
LDC	LDC_DM1	0x18FECA1A	8	Cycle	1000	FlashMalfuncIndicatorLamp	0x0:SlowFlash^0x1:FastFlash^0x2:Reserved^0x3:Unavailable/DoNotFlash	unsigned	0	1	0	0	1	FLAG	1		2.4		5000
LDC	LDC_DM1	0x18FECA1A	8	Cycle	1000	DTC1	DTC1	uint8	0						8		3.1		5000
LDC	LDC_DM1	0x18FECA1A	8	Cycle	1000	DTC2	DTC2	uint8	0						8		4.1		5000
LDC	LDC_DM1	0x18FECA1A	8	Cycle	1000	DTC3	DTC3	uint8	0						8		5.1		5000
LDC	LDC_DM1	0x18FECA1A	8	Cycle	1000	DTC4	DTC4	uint8	0						8		6.1		5000
LDC	LDC_TPCM	0X18ECFF1A	8	NoMsgSendType	0	ControlByte	0x0:ACK^0x1:NACK^0x2:AccessDenied^0x3:CannotRespond^0x10:RTS^0x11:CTS^0x13:E	Unsigned	0x0	1	0	0	255		8	0			
LDC	LDC_TPCM	0X18ECFF1A	8	NoMsgSendType	0	TotalMessageSize		Unsigned	0x0	1	0	0	0		16	8			
LDC	LDC_TPCM	0X18ECFF1A	8	NoMsgSendType	0	TotalNumberOfPacket		Unsigned	0x0	1	0	0	0		8	24			
LDC	LDC_TPCM	0X18ECFF1A	8	NoMsgSendType	0	PGNumber	0xFF:NotAvailable	Unsigned	0x0	1	0	0	16777200		24	40			
LDC	LDC_TPDT	0X18EBFF1A	8	NoMsgSendType	0	SequenceNumber		Unsigned	0x0	1	0	0	252		8	0			
LDC	LDC_TPDT	0X18EBFF1A	8	NoMsgSendType	0	PacketizedData		Unsigned	0x0	1	0	0	0		56	8			
LDC	LDC_to_Tester	0X18DAF91A	8	NoMsgSendType	0	LDC to Tester													
LDC	Tester_to_LDC	0X18DA1AF9	8	NoMsgSendType	0	Tester to LDC													

2.3.4 DTC CODE

DTC	DTC (HEX)	DTC NAME(ENG.)	Cause of Failure(고장원인)	Failure detection Condition	Failure to Normal Condition	Power source at Failure	Failure Detection Time	Check Lamp
C191223	0x591223	LDC Low voltage battery input overvoltage	When the control voltage of LDC exceeds SPEC Sheet	When the control voltage of LDC exceeds SPEC Sheet	Immediately	IGN ON	3sec	O
C191224	0x591224	LDC Low voltage battery input undervoltage	When the control voltage of LDC becomes less than SPEC Sheet	When the control voltage of LDC becomes less than SPEC Sheet	Immediately	IGN ON	3sec	O
C191203	0x591203	LDC High voltage battery input overvoltage	When the input high voltage of LDC exceeds SPEC Sheet	When the input high voltage of LDC exceeds SPEC Sheet	Immediately	IGN ON	3sec	O
C191204	0x591204	LDC High voltage battery input undervoltage	When the input high voltage of LDC becomes less than SPEC Sheet	When the input high voltage of LDC becomes less than SPEC Sheet	Immediately	IGN ON	3sec	O
C191213	0x591213	LDC Ouput Over Voltage	When the output voltage of LDC exceeds SPEC Sheet	When the output voltage of LDC exceeds SPEC Sheet	Reset	IGN ON	3sec	O
C191214	0x591214	LDC Ouput Under Voltage	When the output voltage of LDC becomes less than SPEC	When the output voltage of LDC becomes less than SPEC	Immediately	IGN ON	3sec	O
C191234	0x591234	LDC Blocking after low voltage due to overcurrent	When the output power of the LDC is used as the maximum of the SPEC sheet	When the output power of the LDC is used as the maximum of the SPEC sheet	Reset	IGN ON	100ms	O
C191233	0x591233	LDC Ouput Over Current shutdown	When the output current of LDC is used above SPEC Sheet	When the output current of LDC is used above SPEC Sheet	Reset	IGN ON	100ms	O
C19124E	0x59124E	LDC Voltage Derate according to Temperature	When the temperature of the LDC exceeds 85 degrees	When the temperature of the LDC exceeds 85 degrees	Immediately	IGN ON	3sec	O
C191240	0x591240	LDC Blocking after low voltage due to over Temperature	When the temperature of the LDC exceeds 105 degrees	When the temperature of the LDC exceeds 105 degrees	Reset	IGN ON	100ms	O
C191245	0x591245	LDC Disconnection of temperature sensor	When the LDC's internal temperature sensor is faulty	When the LDC's internal temperature sensor is faulty	Immediately	IGN ON	3sec	O
C191235	0x591235	LDC Disconnection of Current sensor	When the LDC's internal Current sensor is faulty	When the LDC's internal Current sensor is faulty	Immediately	IGN ON	3sec	O
C191252	0x591252	LDC CAN Fault	LDC Can1 Line Short of Open	LDC Can1 Line Short	Reset	IGN ON	2sec	O
C191265	0x591265	LDC Interal Device Fault	LDC internal device burnout	Output voltage current after LDC startup (output voltage less than 24V when current is less than 10A)	Immediately	LDC RUN	5sec	O

3. MECHANICAL SPECIFICATION 기구적 사양

3.1 DIMENSION 기구 치수 및 형상

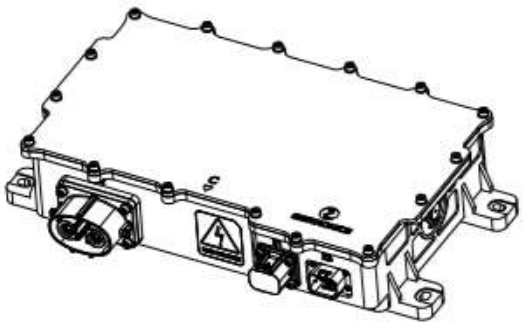

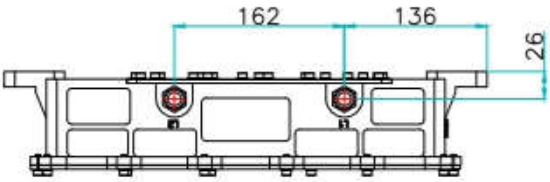

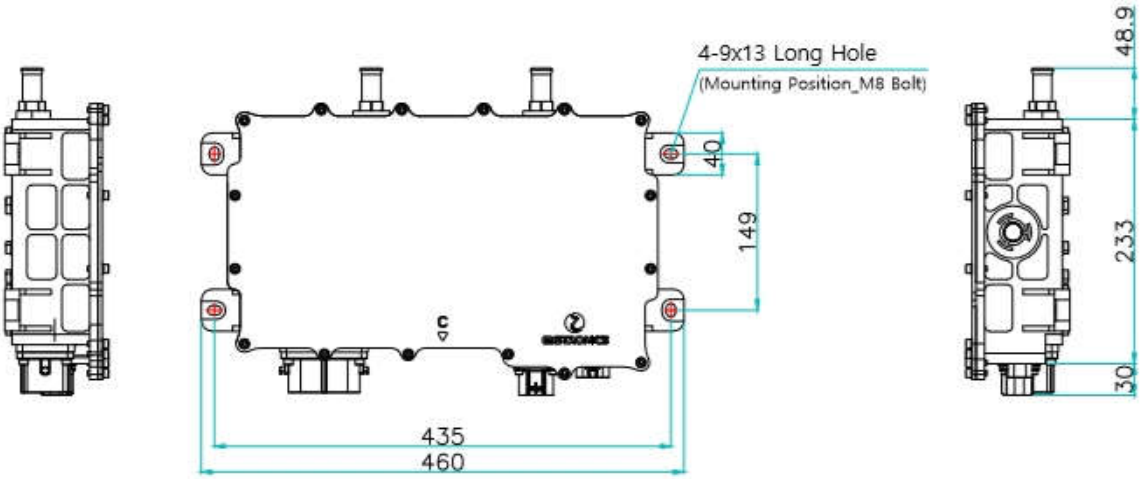

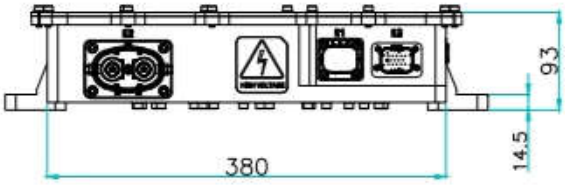

3.2 COOLING NIPPLE SPECIFICATION 냉각수 니플 사양

Vendor : EGTronics

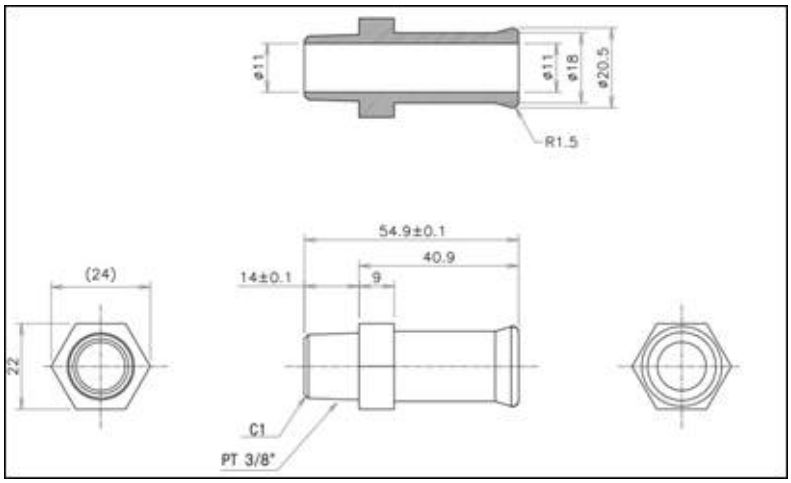

Nipple+Hose+Hose Clip Assy

└ Hose Inside Diameter: 19mm

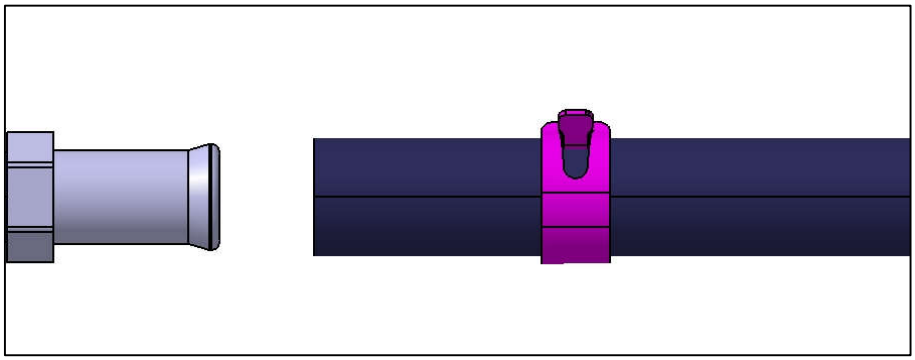

Assy_ISO View